ELE442 – Control Systems
Practice Problems – Exam 1

Problem 1:

Use Laplace transform to solve the given differential equation. Show your work.

$$\frac{d^2x(t)}{dt^2} + 6\frac{dx(t)}{dt} + 8x(t) = 5\sin(3t) \qquad x(0) = 4,\ \ x'(0) = 1$$

$$s^2X(s) - 4s - 1 + 6(sX(s) - 4) + 8X(s) = 5\frac{3}{s^2+9}$$

$$X(s) = \frac{4s^3 + 25s^2 + 36s + 240}{(s^2+9)(s^2+6s+8)} = \frac{4s^3 + 25s^2 + 36s + 240}{(s^2+9)(s+2)(s+4)}$$

$$X(s) = \frac{As+B}{(s^2+9)} + \frac{C}{(s+2)} + \frac{D}{(s+4)}$$

$$4s^3 + 25s^2 + 36s + 240 = (As+B)(s^2+6s+8) + C(s^2+9)(s+4) + D(s^2+9)(s+2)$$

$$s = -2 \rightarrow 236 = 26C \rightarrow C = \frac{118}{13} = 9.077$$

$$s = -4 \rightarrow 240 = -50D \rightarrow D = \frac{-24}{5} = -4.8$$

$$4s^3 + 25s^2 + 36s + 240$$
$$= As^3 + 6As^2 + 8As + Bs^2 + 6Bs + 8B + \frac{118}{13}s^3 + \frac{118}{13}\times 4s^2 + \frac{118}{13}\times 9s$$
$$+ \frac{118}{13}\times 9\times 4 + \left(-\frac{24}{5}\right)(s^3 + 2s^2 + 9s + 18)$$

$$4 = A + \frac{118}{13} - \frac{24}{5} \rightarrow A = -\frac{18}{65} = -0.277$$

$$8B + \frac{118}{13}\times 9\times 4 - \frac{24}{5}\times 18 = 240 \rightarrow B = -\frac{3}{65} = -0.046$$

$$X(s) = \frac{-18s+B}{65(s^2+9)} - \frac{3}{65(s^2+9)} + \frac{118}{13(s+2)} - \frac{24}{5(s+4)}$$

$$x(t) = -\frac{18}{65}\cos 3t - \frac{1}{65}\sin 3t + \frac{118}{13}e^{-2t} - \frac{24}{5}e^{-4t} \qquad t > 0$$

Problem 2:

A system having an input reference $x(t)$ and output $y(t)$ is represented by the below differential equation. Find the equivalent transfer function of the system given zero initial conditions.

$$\frac{d^3y(t)}{dt^3} + 3\frac{d^2y(t)}{dt^2} + 5\frac{dy(t)}{dt} + y(t) = \frac{d^3x(t)}{dt^3} + 4\frac{d^2x(t)}{dt^2} + 6\frac{dx(t)}{dt} + 8x(t)$$

$$s^3Y(s) + 3s^2Y(s) + 5sY(s) + Y(s) = s^3X(s) + 4s^2X(s) + 6sX(s) + 8X(s)$$

$$\frac{Y(s)}{X(s)} = \frac{s^3 + 4s^2 + 6s + 8}{s^3 + 3s^2 + 5s + 1}$$

Problem 3:

Find the transfer function $\frac{V_{out}(s)}{V_{in}(s)}$ of the circuit in the figure below.

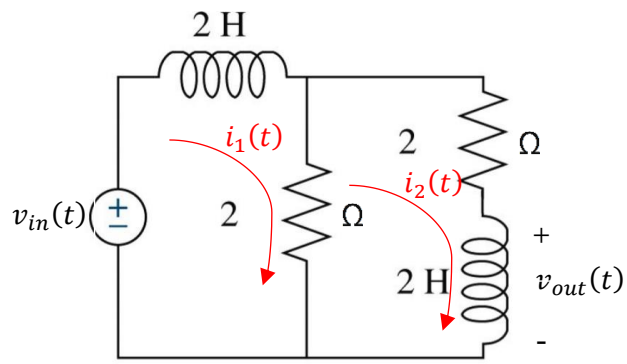

$$-V_{in}(s) + 2sI_1(s) + 2\big(I_1(s) - I_2(s)\big) = 0 \qquad (1)$$

$$2\big(I_2(s) - I_1(s)\big) + 2I_2(s) + 2sI_2(s) = 0 \rightarrow I_1(s) = (s+2)I_2(s) \qquad (2)$$

Substituting (2) in (1):

$$(2s+2)(s+2)I_2(s) - 2I_2(s) = V_{in}(s)$$

$$\frac{I_2(s)}{V_{in}(s)} = \frac{1}{2s^2 + 6s + 2}$$

$$V_{out}(s) = 2sI_2(s)$$

$$\frac{V_{out}(s)}{V_{in}(s)} = \frac{s}{s^2 + 3s + 1}$$

Problem 4:

Use block diagram reduction to obtain the transfer function $Y(s)/R(s)$. **Show your work.**

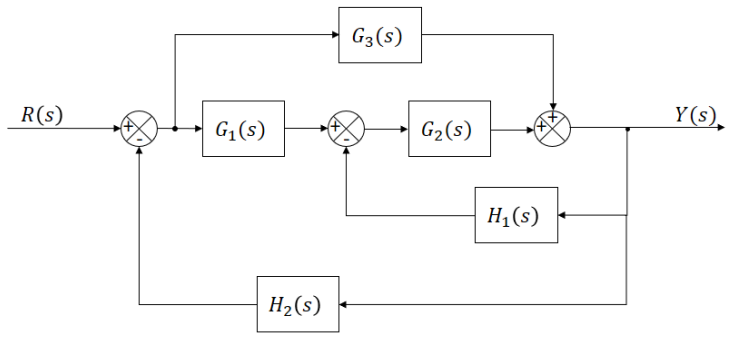

Solution:

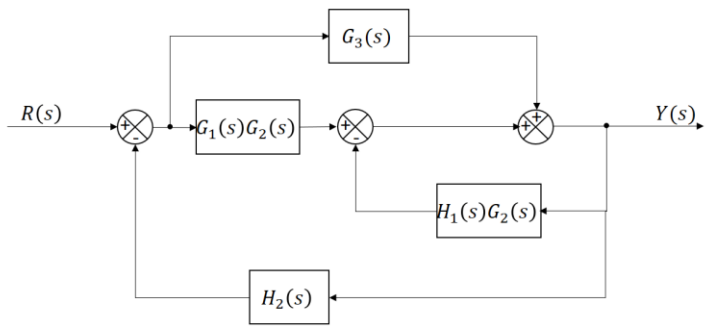

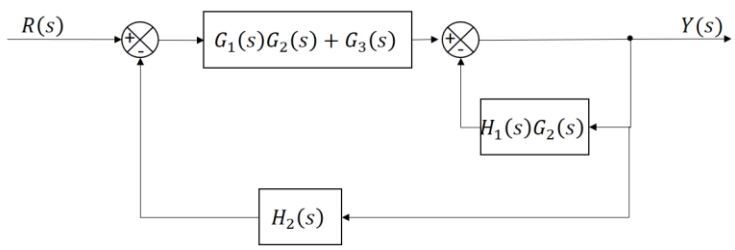

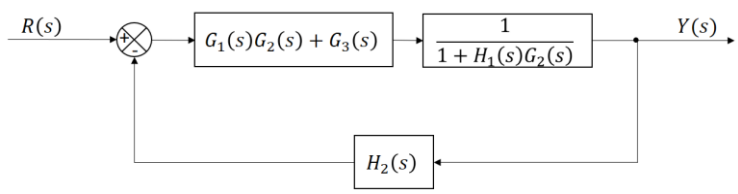

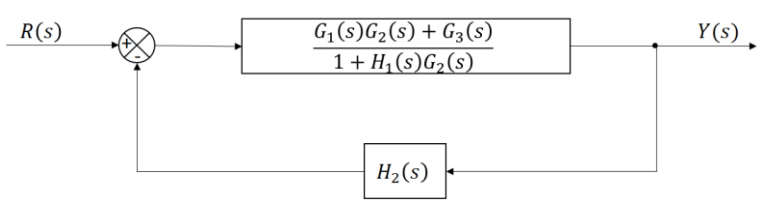

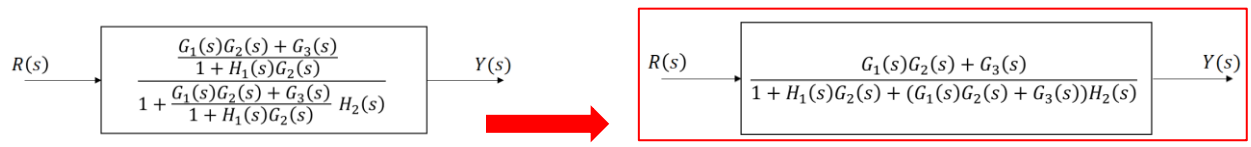

Problem 5:

Use Mason's Rule to derive the transfer function $Y(s)/R(s)$ of the signal-flow graph shown below. **Show your work.**

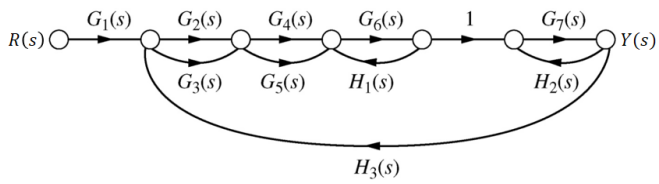

Forward path gains:

$P_1 = G_1G_2G_4G_6G_7$

$P_2 = G_1G_2G_5G_6G_7$

$P_3 = G_1G_3G_4G_6G_7$

$P_4 = G_1G_3G_5G_6G_7$

Individual loop gains:

$L_1 = G_2G_4G_6G_7H_3$

$L_2 = G_2G_5G_6G_7H_3$

$L_3 = G_3G_4G_6G_7H_3$

$L_4 = G_3G_5G_6G_7H_3$

$L_5 = G_6H_1$

$L_6 = G_7H_2$

Pairs of non-touching loops:

$nl_1 = G_6H_1 \cdot G_7H_2$

$\Delta = 1 - G_6G_7H_3(G_2G_4 + G_2G_5 + G_3G_4 + G_3G_5) - G_6H_1 - G_7H_2 + G_6H_1 \cdot G_7H_2$

All loops touch all forward paths:

$\Delta_1 = \Delta_2 = \Delta_3 = \Delta_4 = 1$

CLTF:

$$\frac{Y(s)}{R(s)} = \frac{G_1G_2G_4G_6G_7 + G_1G_2G_5G_6G_7 + G_1G_3G_4G_6G_7 + G_1G_3G_5G_6G_7}{1 - G_6G_7H_3(G_2G_4 + G_2G_5 + G_3G_4 + G_3G_5) - G_6H_1 - G_7H_2 + G_6H_1 \cdot G_7H_2}$$

Problem 6:

Use Mason's Rule to derive the transfer function $Y(s)/R(s)$ of the block diagram shown in the figure below. **Show your work.**

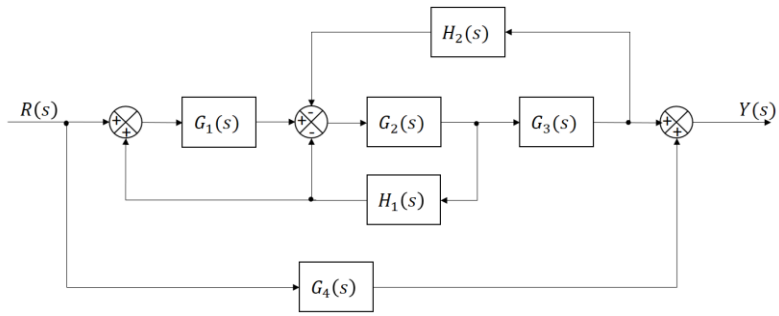

Forward path gains:

$P_1 = G_1G_2G_3$

$P_2 = G_4$

Individual loop gains:

$L_1 = -G_2H_1$

$L_2 = -G_2G_3H_2$

$L_3 = G_1G_2H_1$

Pairs of non-touching loops: None

$\Delta = 1 + G_2H_1 + G_2G_3H_2 - G_1G_2H_1$

All loops touch forward path 1:

$\Delta_1 = 1$

None of the loops touch forward path 2:

$\Delta_2 = \Delta = 1 + G_2H_1 + G_2G_3H_2 - G_1G_2H_1$

CLTF:

$$\frac{Y(s)}{R(s)} = \frac{G_1G_2G_3 + G_4(1 + G_2H_1 + G_2G_3H_2 - G_1G_2H_1)}{1 + G_2H_1 + G_2G_3H_2 - G_1G_2H_1}$$

Problem 7:

Given the system

$$G(s) = \frac{s+\alpha}{(s^3+6s^2+5s)}\left(\frac{5}{\alpha}\right)$$

a) Find $g(t)$, the inverse Laplace transform.

$$G(s) = \frac{s+\alpha}{s(s+1)(s+5)}\left(\frac{5}{\alpha}\right) = \left(\frac{5}{\alpha}\right)\left(\frac{\alpha/5}{s} + \frac{(1-\alpha)/4}{s+1} + \frac{(\alpha-5)/20}{s+5}\right)$$

$$g(t) = \left(\frac{5}{\alpha}\right)\left(\frac{\alpha}{5} + \frac{(1-\alpha)}{4}e^{-t} + \frac{(\alpha-5)}{20}e^{-5t}\right)u(t) = \left(1 + \frac{(5-5\alpha)}{4\alpha}e^{-t} + \frac{(\alpha-5)}{4\alpha}e^{-5t}\right)u(t)$$

b) Find α such that at $t = 0$ the contribution to $g(t)$ due to the pole at -5 is -5 times the contribution due to the pole at -1.

$$\frac{(\alpha-5)}{4\alpha} = -5 \times \frac{(5-5\alpha)}{4\alpha} \rightarrow \alpha - 5 = -25 + 25\alpha \rightarrow 24\alpha = 20 \rightarrow \alpha = 5/6$$

Problem 8:

Use Mason's Rule to derive the transfer function $Y(s)/R(s)$ of the signal-flow graph shown below. **Show your work.**

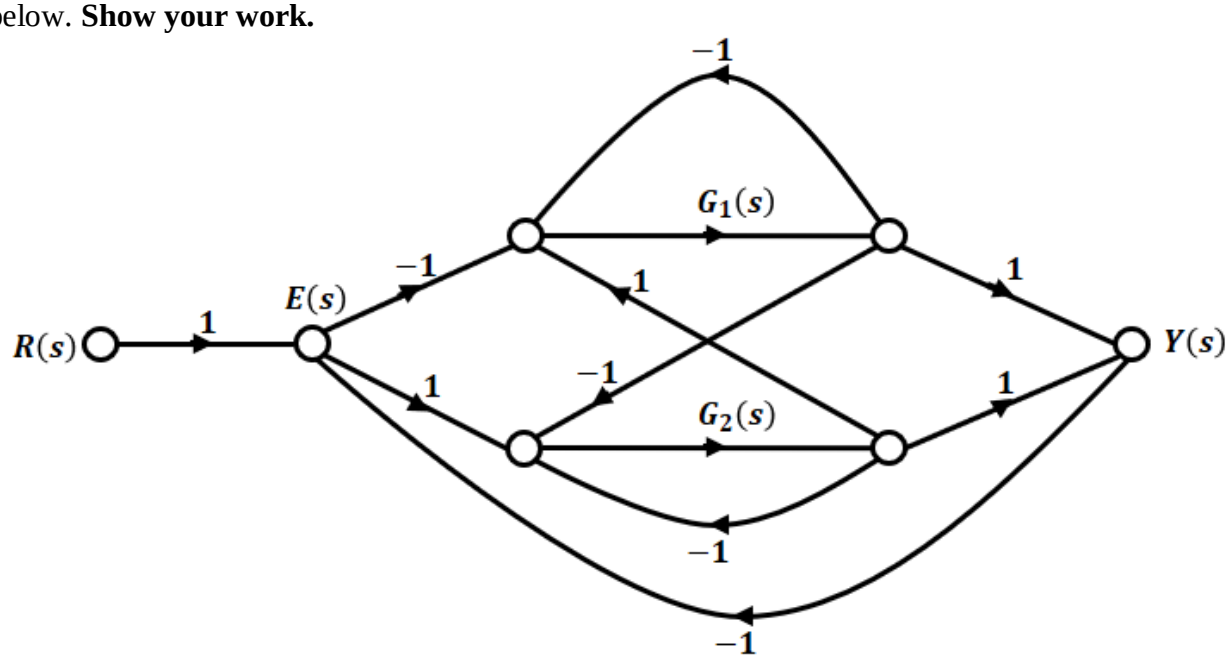

7 loops: $l_1 = G_1(-1),\ l_2 = G_2(-1),\ l_3 = G_1(-1)G_2(1),$
$l_4 = (-1)G_1(1)(-1),$
$l_5 = (-1)G_1(-1)G_2(1)(-1),\ l_6 = (1)G_2(1)(-1),\ l_7 = (1)G_2(1)G_1(1)(-1)$

<u>3 non-touching loop pairs</u>: $l_1 l_2 = G_1 G_2,\ \ l_4 l_2 = -G_1 G_2,\ \ l_6 l_1 = G_2 G_1$

$\Delta = 1 + 2G_2 + 4G_1 G_2$

<u>4 forward paths</u>: $p_1 = (-1)G_1(1) \quad \Delta_1 = 1 + G_2$
$p_2 = (-1)G_1(-1)G_2(1) \quad \Delta_2 = 1$
$p_3 = (1)G_2(1) \quad \Delta_3 = 1 + G_1$
$p_4 = (1)G_2(1)G_1(1) \quad \Delta_4 = 1$

<u>Overall TF</u>:

$$\frac{Y(s)}{R(s)} = \frac{\sum p_i \Delta_i}{\Delta} = \frac{G_2 - G_1 + 2G_1 G_2}{1 + 2G_2 + 4G_1 G_2}$$